Rewarding Learning

Centre Number

Candidate Number

General Certificate of Secondary Education
2022

Technology and Design

Unit 2

Option A:
Electronic and Microelectronic
Control Systems

[GTY21]

GTY21

THURSDAY 16 JUNE, AFTERNOON

TIME

1 hour 30 minutes.

INSTRUCTIONS TO CANDIDATES

Write your Centre Number and Candidate Number in the spaces provided at the top of this page.
You must answer the questions in the spaces provided.
Do not write outside the boxed area on each page or on blank pages.
Questions which require drawing or sketching should be completed using an H.B. pencil.
All other questions must be completed using black ink only.
Do not write in pencil or with a gel pen.
Answer **both** questions.

INFORMATION FOR CANDIDATES

The total mark for this paper is 100.
Quality of written communication will be assessed in Question **1(d)**.
Figures in brackets printed down the right-hand side of pages indicate the marks awarded to each question or part question.
The Formula sheet is on page 2.

13007

24GTY2101

Formulae for GCSE Technology and Design

You should use, where appropriate, the formulae given below when answering questions which include calculations.

1 Potential Difference = current × resistance ($V = I \times R$)

2 For potential divider $V_{out} = \frac{R_2}{(R_1 + R_2)} \times V_{in}$

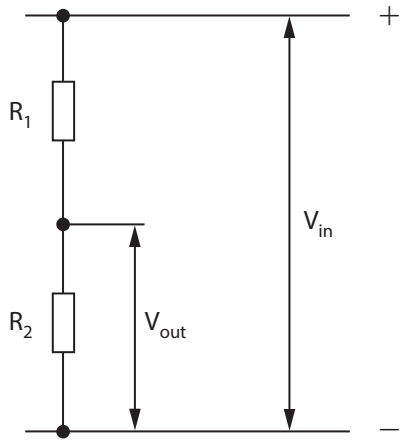

3 Series Resistors $R_t = R_1 + R_2 + ... + R_n$

4 Parallel Resistors $\frac{1}{R_t} = \frac{1}{R_1} + \frac{1}{R_2}$ *or* $R_t = \frac{R_1 \times R_2}{R_1 + R_2}$

5 Time Constant $T = R \times C$

6 Period $T = \frac{1}{f}$

7 Frequency (Hz) $f = \frac{1.44}{(R_1 + 2R_2)C}$ for the output of an astable circuit using a 555 timer

8 Time $T = 1.1 \times C \times R$ for the output of a monostable circuit using a 555 timer

13007

Answer **all** questions

1 **(a)** With reference to integrated circuits, state what is meant by DIL. Explain with the aid of a sketch how pin one can be identified.

DIL _____ [1]

Sketch

Identity of Pin One _____

_____ [2]

[Turn over

(b) (i) Three resistors connected in series are required to complete the circuit diagram in **Fig. 1**. Complete the circuit diagram as described. [3]

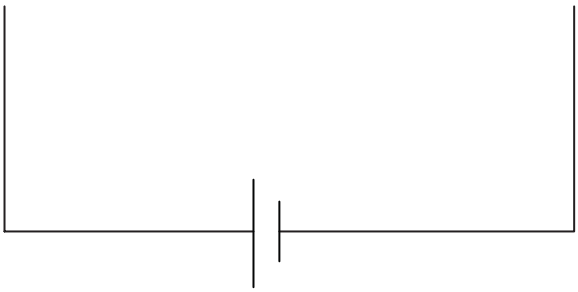

Fig. 1

(ii) Two resistors connected in parallel are required to complete the circuit diagram in **Fig. 2**. Complete the circuit diagram as described. [3]

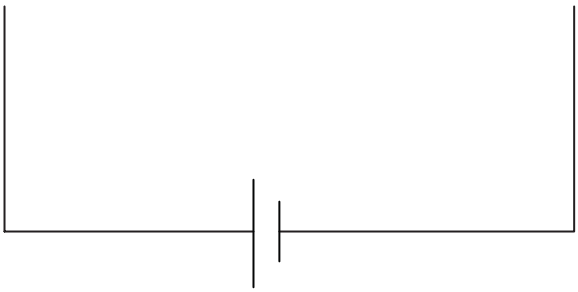

Fig. 2

(iii) If the resistors used in **Fig. 2** have values of **3.9 kΩ** and **6.8 kΩ** respectively, calculate the value of the single resistance needed to replace the two resistors.

Candidates need to show their working out in the space below.

Answer _____ [3]

(iv) Explain why it is necessary to have a fourth colour band on the body of a resistor.

_____

_____

_____

_____ [2]

(v) Use Ohm's law to calculate the current which flows through the resistor shown in **Fig. 3**.

Candidates need to show their working out in the space below.

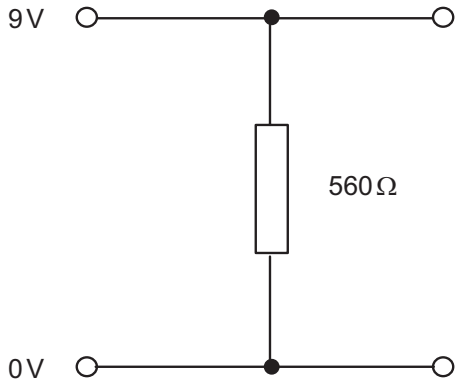

Fig. 3

Answer _____ [3]

(vi) Name the instrument which could be used to measure the current through the resistor in **Fig. 3**.

_____ [1]

(vii) Name the type of circuit shown in **Fig. 4**.

_____ [1]

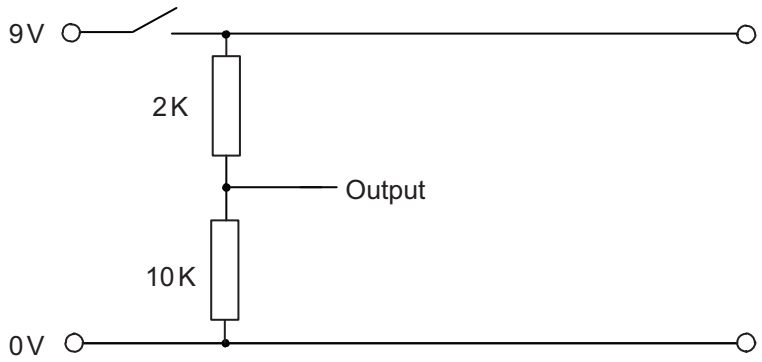

Fig. 4

(viii) Calculate the output for the circuit shown in **Fig. 4**.

Candidates need to show their working out in the space below.

Answer _____ [3]

[Turn over

(c) Timing circuits are constructed using potential divider circuits and 555 integrated circuit components (ICs).

(i) A partially complete timing circuit is shown in **Fig. 5**. Complete **Fig. 5** to produce a monostable timing circuit.

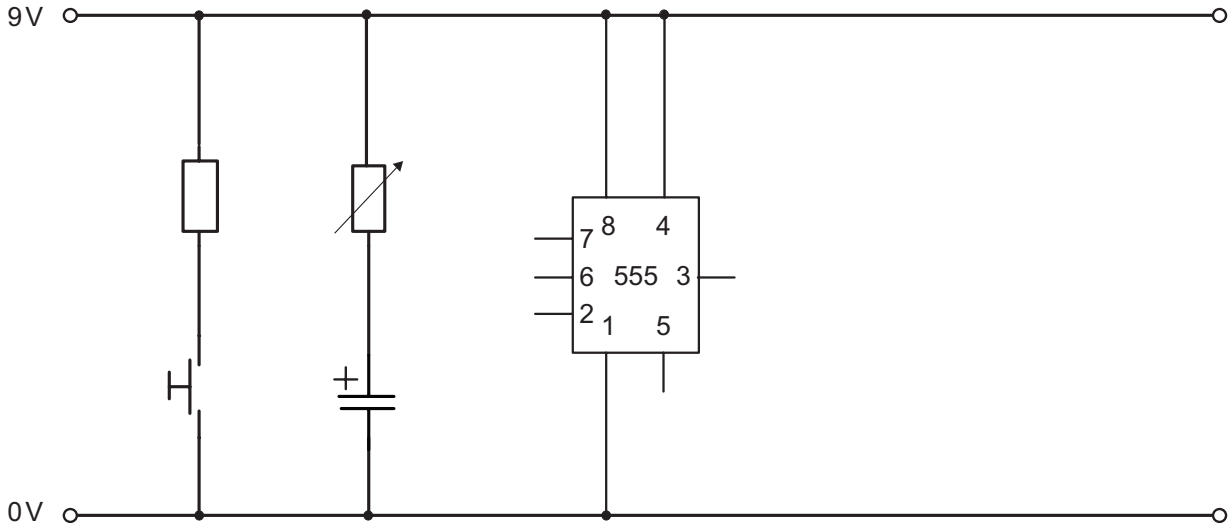

[6]

Fig. 5

(ii) What is the purpose of pin 3 in the 555 integrated circuit (IC)?

_____ [1]

(iii) Use the Voltage/Time graph shown in **Fig. 6** to sketch the expected output of the monostable timing circuit. [1]

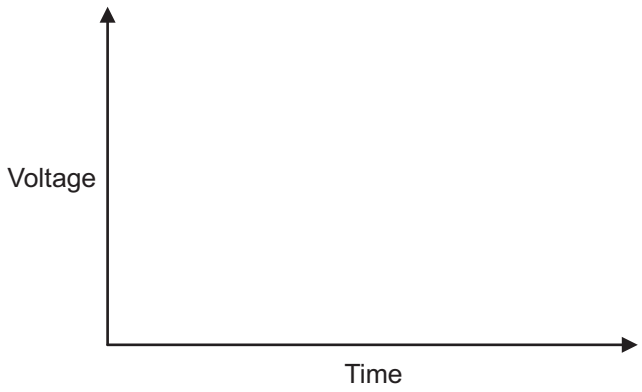

Fig. 6

(iv) Name the **two** components used in the circuit to provide the time constant.

1. _____

2. _____ [2]

(v) Outline **two** ways to change the time constant in this circuit.

1. _____

2. _____ [2]

(vi) **Fig. 5** is to be developed to enable a buzzer to sound. The output of the 555 timer is insufficient to drive the buzzer directly. Complete **Fig. 5** to show how this could be made to happen. [6]

[Turn over

(d) A range of electronic components is available to build electronic circuits to fulfil specific functions. Some of these components are classified as input or output components.

Discuss the use of any **three** input components and any **two** output components that may be used in specific circuits. Your answer should classify each selected component as input or output and focus on why and how it is used in a specific circuit.

Quality of written communication will be assessed in this question.

[10]

2 **(a)** Electronic circuits like the one shown in **Fig. 7** are usually modelled before they are actually manufactured.

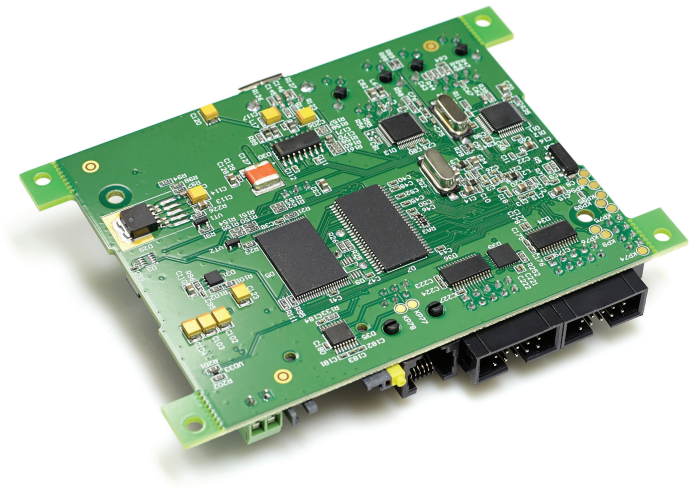

© Getty Images

Fig. 7

(i) Suggest **two** benefits of modelling electronic circuits.

1. _____ [1]

2. _____ [1]

(ii) Name **two** methods that could be used to model an electronic circuit.

1. _____ [1]

2. _____ [1]

(b) **(i)** State the **two** binary numbers that are used in programming.

_____ [2]

(ii) State the binary number that represents high and the binary number that represents low in programming.

HIGH _____

LOW _____ [2]

(iii) Modern motor vehicles are fitted with a number of microprocessors (PICs). List **three** examples of the use of PICs in modern motor vehicles.

1. _____ [1]

2. _____ [1]

3. _____ [1]

(iv) Vehicles are often controlled by traffic lights at road junctions, as shown in **Fig. 8**. **Table 1** shows the traffic light sequence for both sets of lights. Both sets of traffic lights in **Fig. 8** are controlled by a microcontroller (PIC).

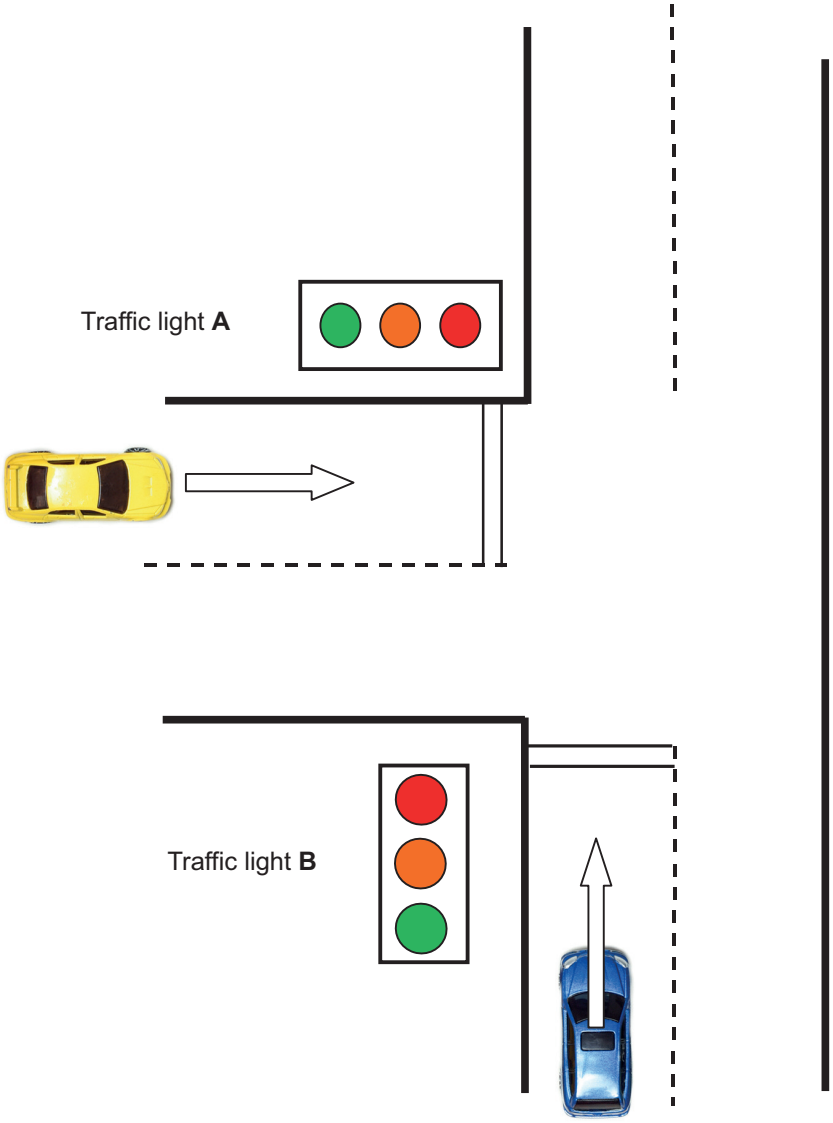

© *Principal Examiner and Getty Images*

Fig. 8

Complete **Table 2** to show the bit pattern output for the system required to run the traffic lights for **one** cycle. The sequence should start with traffic light **A** showing **GREEN** and traffic light **B** showing **RED**. [8]

Table 1

Traffic Light A	Traffic Light B
GREEN	RED
AMBER	RED + AMBER
RED	GREEN
AMBER + RED	AMBER

Table 2

PIC Output BIT Pattern							
X	X	RED A	AMBER A	GREEN A	GREEN B	AMBER B	RED B
7	6	5	4	3	2	1	0

[Turn over

(c) A proposed model for a temporary traffic robot with a destination sign is shown in **Fig. 9**. The robot incorporates a blue LED inside a rotating beacon, a mechanism for a directional arrow, and stop and go LEDs. The directional arrow rotates clockwise and anti-clockwise as illustrated in the diagram. The robot is controlled by a PIC microcontroller.

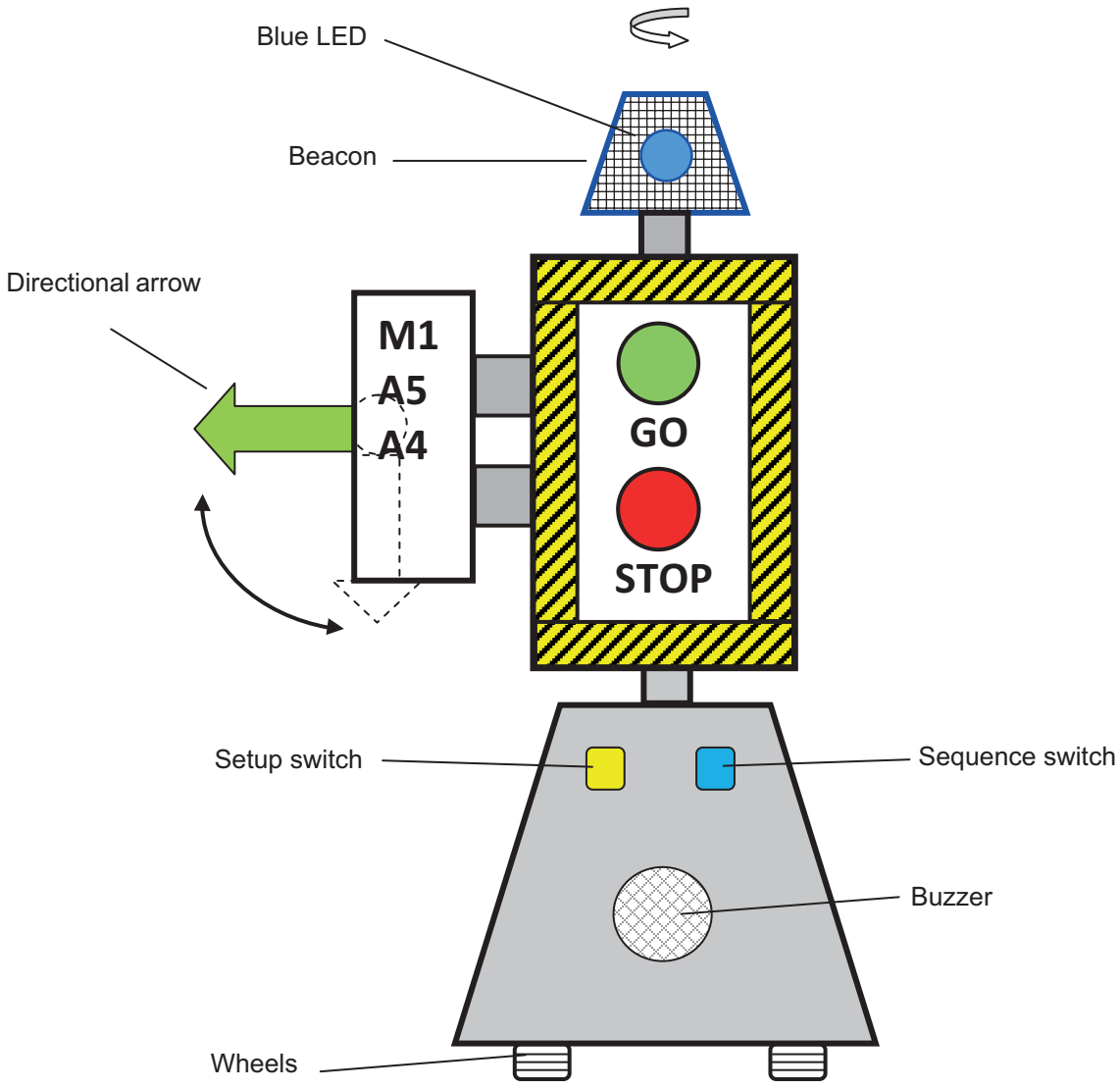

Source: Principal Examiner

Fig. 9

Seven of the eight PIC outputs and two of the five PIC inputs are to be used to control the robot unit. The output connections are shown in **Table 3** and the inputs are shown in **Table 4**.

Outputs 0 and 1 control the LEDs for red 'STOP' and green 'GO', and output 2 controls the blue LED within the robot. Outputs 3 and 4 control the movement of the directional arrow, and output 5 controls the rotation of the beacon. When the robot is turned off the directional arrow points vertically down as shown by the dashed arrow in **Fig. 9**.

The Setup switch controls input 1 and the Sequence switch controls input 2.

Table 3

PIC Outputs	Not used	Buzzer	Rotating beacon	Directional arrow (Anti-clockwise)	Directional arrow (Clockwise)	Blue LED	Green LED	Red LED
BIT	7	6	5	4	3	2	1	0

Table 4

PIC Inputs	Not used	Not used	Sequence switch	Setup switch	Not used
BIT	4	3	2	1	0

Construct a series of flowcharts in **Figs. 10**, **11** and **12** to represent the operation of the temporary traffic robot.

(i) Complete the macro flowchart **SETUP** and bit pattern in **Fig. 10** as follows:

The blue LED in the beacon comes on. Three seconds later the beacon rotates. Six seconds after the blue LED comes on, the red 'STOP' sign turns on. Eight seconds after the blue LED is switched on, the buzzer sounds for five seconds before the macro ends. Show the output bit patterns necessary when the beacon rotates and when the buzzer sounds. [10]

	SETUP			BIT PATTERN

Fig. 10

(ii) Complete the macro flowchart **SEQUENCE** in **Fig. 11** to show the operation of the lights and mechanism for the temporary traffic robot system. The directional arrow initially points vertically down.

The green 'GO' LED comes on. The directional arrow rotates clockwise for two seconds and stops in the horizontal position. After forty seconds the red 'STOP' LED comes on, the green 'GO' LED goes off and the directional arrow rotates anti-clockwise for two seconds to the vertical position. After forty seconds, the red 'STOP' LED goes off and the macro stops. [11]

	SEQUENCE			
	↓			

Fig. 11

[Turn over

(iii) Complete the flowchart in **Fig. 12** to show the full operation of the temporary traffic robot system:

When the Setup switch is turned on, the **SETUP** macro is activated. When the Sequence switch is turned on, the red LED goes off and the macro **SEQUENCE** is then activated. The macro **SEQUENCE** will repeat until the Setup switch is turned off. [10]

	START			

Fig. 12

THIS IS THE END OF THE QUESTION PAPER

BLANK PAGE

DO NOT WRITE ON THIS PAGE

BLANK PAGE

DO NOT WRITE ON THIS PAGE

DO NOT WRITE ON THIS PAGE

For Examiner's use only	
Question Number	Marks
1	
2	
Total Marks	

Examiner Number

Permission to reproduce all copyright material has been applied for.
In some cases, efforts to contact copyright holders may have been unsuccessful and CCEA will be happy to rectify any omissions of acknowledgement in future if notified.